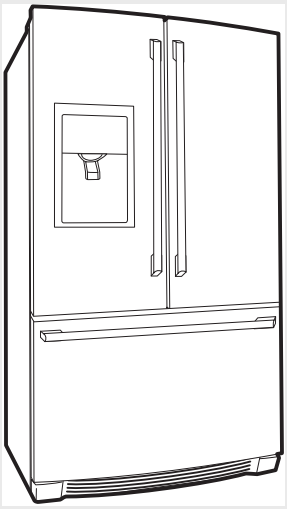

FRIGIDAIRE

Factory Parts Catalog

Product No.	LGUB2642LE3	LGUB2642LP3
Series	Gallery FDBM	Gallery FDBM
Color	black smooth	white smooth
Volts	115	115
Owner's Guide	242134901	242134901
Market	North America	North America
Energy Guide	242110214	242110214
Service Data Sheet	240389646	240389646
Installation Instructions	242046901	242046901

Frigidaire
P.O. BOX 8020
CHARLOTTE, NC 28262

Publication No.
5995592622
11/04/14
(EN/SERVICE/JLH)
137

FRENCH DOOR BOTTOM FREEZER/REFRIGERATOR W/DISPENSER

Model No.
LGUB2642L

FREEZER DRAWER, BASKETS

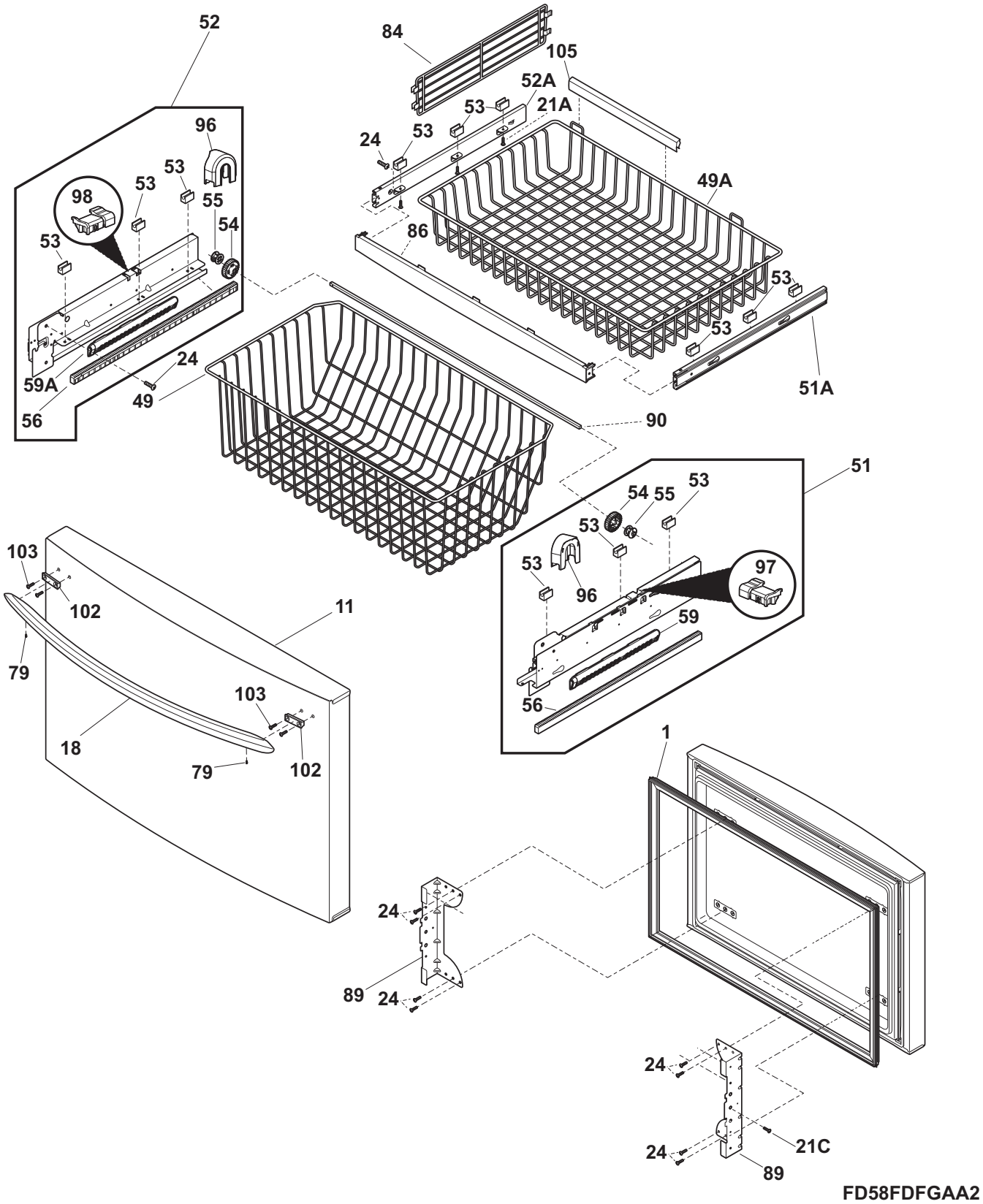

FREEZER DRAWER, BASKETS

Model Index: A LGUB2642L (LGUB2642LE3)
B LGUB2642L (LGUB2642LP3)

POS. NO	PART NO.			DESCRIPTION
1 #	241778304	A	-	Gasket-frzr drawer, black, magnetic
1 #	241778302	-	B	Gasket-frzr drawer, white, magnetic
11	241987914	A	-	Door-frzr, black (smooth), complete assy
11	241987913	-	B	Door-frzr, white, complete assy
18	242029403	A	-	Handle-door, black
18	242029402	-	B	Handle-door, white
18*	241601001	A	B	Wrench, allen
18*	241701902	A	B	Screwdriver-3/32" balldriver
21A	241953902	A	B	Screw, #8 - 18 X .380, 3
21C	241899703	A	B	Screw, truss head, #10-32 x 1/4, zinc
21C*	241892902	A	B	PLATE, TAPPING
24	240383406	A	B	Screw, truss hd quad, #10-16 x .500, zinc
49	242026802	A	B	Basket-frzr, lower
49A	241780809	A	B	Basket-frzr, upper
51	241883601	A	B	Slide Assembly, basket lower, RH, freezer drawer
51*	242039701	A	B	Screw
51A	241894201	A	B	Slide Assembly, basket, RH, freezer drawer
52	241883701	A	B	Slide Assembly, basket lower, LH, freezer drawer
52A	241894203	A	B	Slide Assembly, basket, LH, freezer drawer
53	241824201	A	B	Retainer-basket
54	241770201	A	B	Pinion
55	241770301	A	B	Pinion-idler
56	241762801	A	B	Rack, drawer travel
59	241979702	A	B	Closure, drawer
59A	241979701	A	B	Closure, drawer
79	218755407	A	B	Screw-set, 10-32 x 0.500
84	241780901	A	B	Divider, basket, upper
86	242090701	A	B	Bar-stabilizer, freezer drawer
86*	241812202	A	B	Magnet, freezer drawer
89	241972302	A	B	Bracket-freezer drawer
89*	241899602	A	B	Screw, hex whd, 1/4-20 x 3/8", connects frz, rails to door, (4)
89*	241979601	A	B	Bumper, rubber
90	241770703	A	B	Bar-timing
90*	242011101	A	B	Pin-lock
96	241973501	A	B	Cover, pinion, white
97	241926401	A	B	Actuator, RH, white, light
98	241926403	A	B	Actuator, LH, white, light
102	242029301	A	B	Block-handle mtg
103	242077302	A	B	Screw, #10 AB flat hd
105	242116801	A	B	Trim-basket

Functional Parts
* Non-Illustrated Parts

FRESH FOOD DOOR

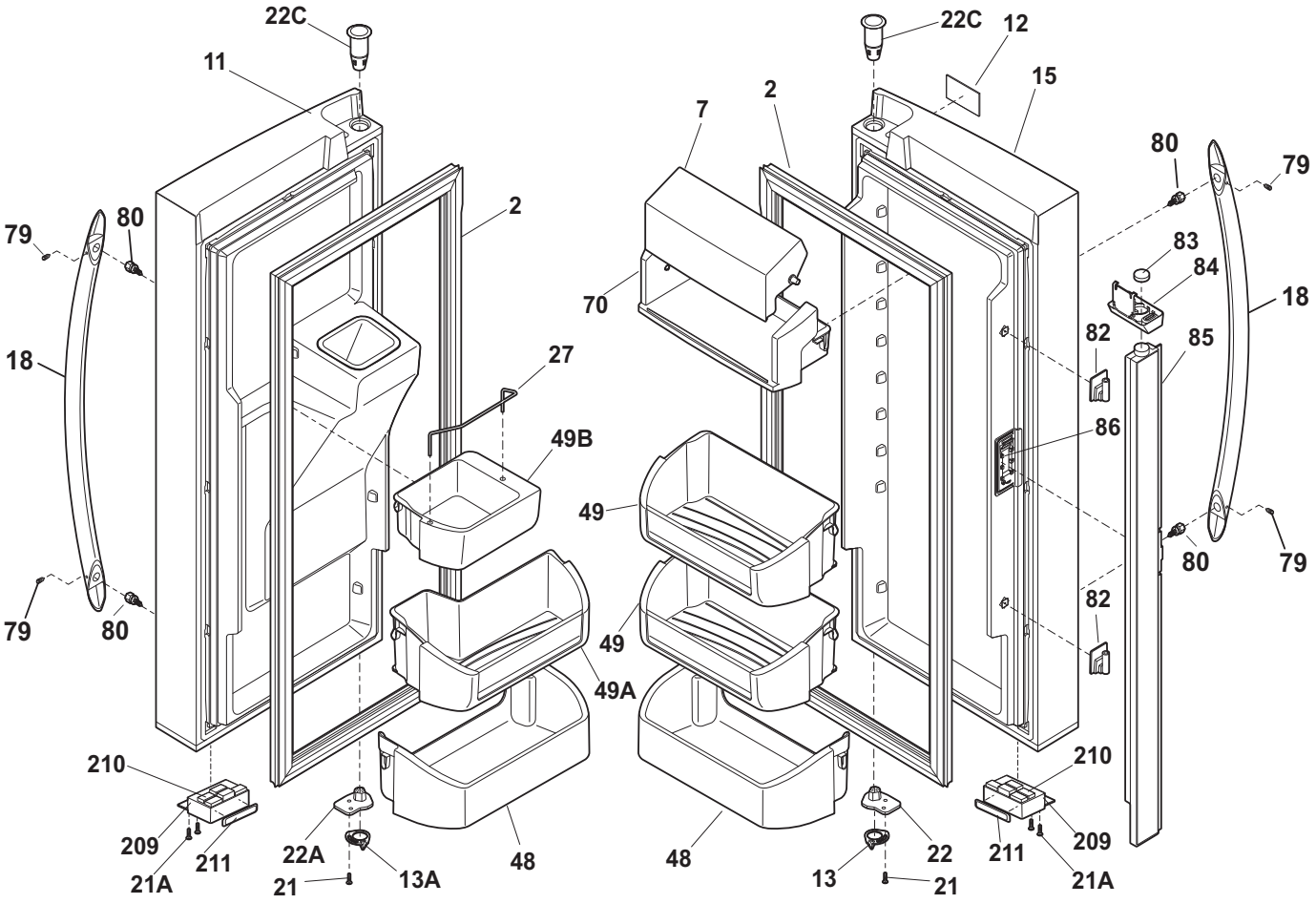

FD58RFGAAA1

FRESH FOOD DOOR

Model Index: A LGUB2642L (LGUB2642LE3)
B LGUB2642L (LGUB2642LP3)

POS. NO	PART NO.			DESCRIPTION
2 #	241778303	A	-	Gasket-refr door, black, magnetic
2 #	241778301	-	B	Gasket-door, white
7	242011401	A	B	Door-dairy, removable
11	241988043	A	-	Door-refr, smooth, black, complete assy
11	241988041	-	B	Door-refr, smooth, white, complete assy
12	242015201	A	B	Label-nameplate
13	241868401	A	B	Door Stop, refrig RH, plated
13A	241868402	A	B	Door Stop, refr LH, plated
15	241988042	A	-	Door-refr, black, RH
15	241988040	-	B	Door-refr, white, RH
18	241930103	A	-	Handle-door, black
18	241930102	-	B	Handle-door, white, (2)
18*	241601001	A	B	Wrench, allen
18*	241701902	A	B	Screwdriver-3/32" balldriver
21	242017501	A	B	Screw, 10-32 x 0.750
21A	241953901	A	B	Screw, #8-18
22	242075601	A	B	Cam, upper hinge, RH
22A	242075602	A	B	Cam, upper hinge, LH
22C	241760401	A	B	Bearing, hinge, top
27	241752703	A	B	Retainer, tall bottle
48	242071401	A	B	Bin-door, pseudo, white
49	242011501	A	B	Bin-door, gallon
49A	242071301	A	B	Bin-door, 2-liter
49B	242011701	A	B	Bin-door, dispenser
70	241804604	A	B	Compartment-dairy, removable
79	218755408	A	B	Screw-set, 10-32 x 0.650
80	218755504	A	B	Screw-shoulder, #10 AB, handle mounting
82	241779401	A	B	Hinge-mullion, upper/lower, flipper
83	241812201	A	B	Magnet, door
84	241779702	A	B	Guide-mullion flipper
85	241778801	A	B	Flipper mullion assembly
85*#	241788401	A	B	Harness-wiring, flipper mullion
85*	242064001	A	B	Screw
86	241779801	A	B	Hinge-mullion, center, flipper
209	242021002	A	-	Housing-magnet, black
209	242021001	-	B	Housing-magnet, white
210	241779103	A	B	Magnet, door
211	241979601	A	B	Bumper, rubber
* #	242040802	A	B	Harness-wiring, door
*	241891401	A	B	Cover-light, LED
*	242015001	A	B	Screw, #10 8-19 x 1/2
*	242068601	A	B	Bumper, RH door
*	242103001	A	B	Connector-water, straight
*	5303918371	A	B	Dispenser heater kit, 115

Functional Parts
* Non-Illustrated Parts

CABINET

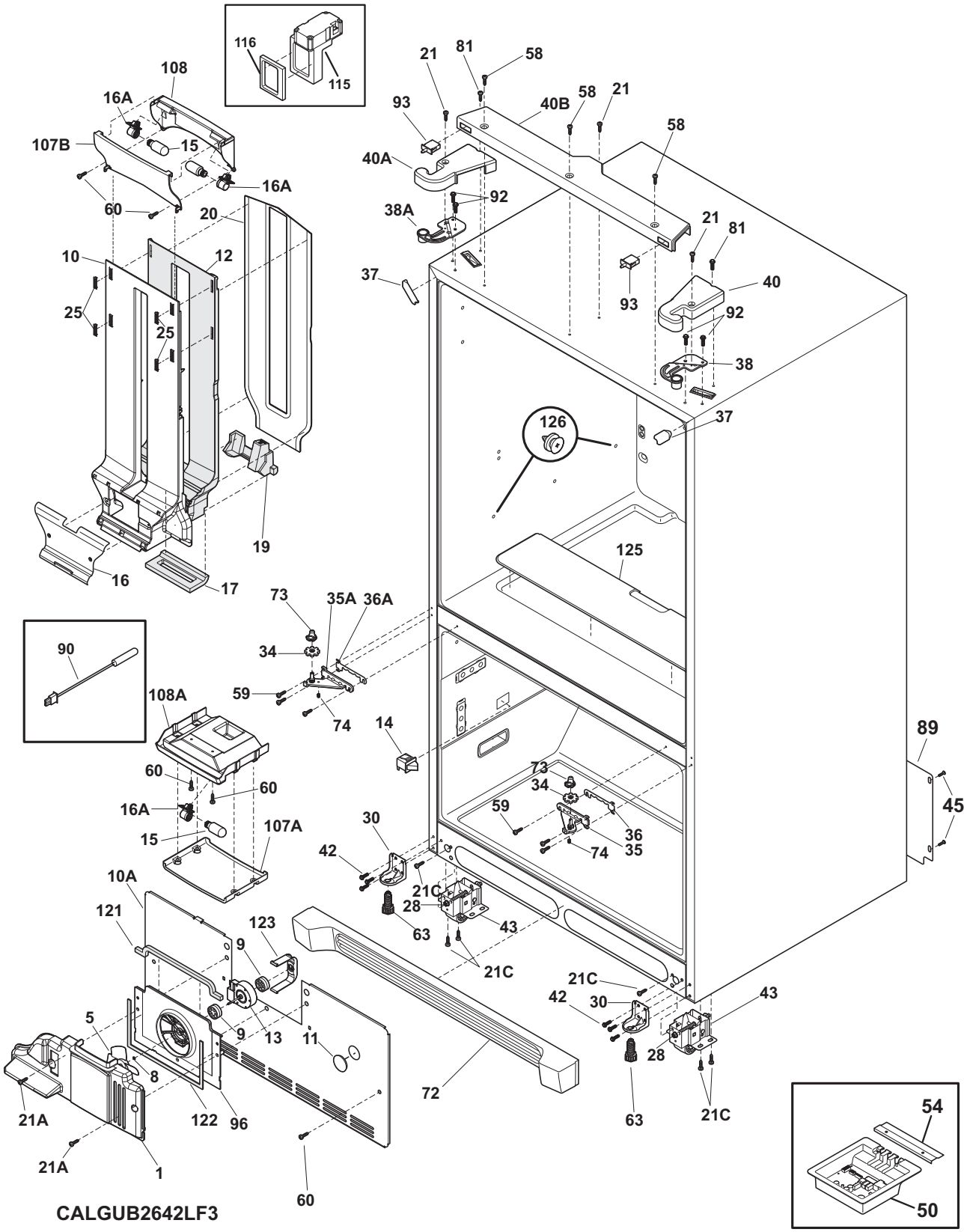
116
115
108
16A
107B
15
16A
60
20
10
12
25
25
16
17
19
21
81
58
93
40B
58
21
58
40A
92
38A
21
81
37
93
40
92
38
126
37
125
73
35A
36A
34
90
59
74
108A
14
89
60
60
73
34
16A
59
45
15
107A
30
36
42
74
35
10A
21C
121
28
123
63
43
9
21C
21C
42
30
43
5
9
13
11
28
8
72
21A
122
96
63
21C
54
21A
1
60
50
CALGUB2642LF3

CABINET

Model Index: A LGUB2642L (LGUB2642LE3)
B LGUB2642L (LGUB2642LP3)

POS. NO	PART NO.			DESCRIPTION
1	242099401	A	B	Cover-fan
5 #	5308000010	A	B	Fan Blade, red, evaporator fan
8	215474201	A	B	Washer, "slinger", nylon, evap fan shaft
9	241518301	A	B	Bushing, motor mounting
10	242072002	A	B	Cover-air duct
10*#	242061603	A	B	Harness-wiring, dispenser
10A	242084101	A	B	Cover-evap coil, lower
11	5303208309	A	B	Plug-hole, factory test
12	242072401	A	B	Insulation-air duct
13 #	241509402	A	B	Motor, evaporator fan
14 #	242060201	A	B	Switch-light/lamp, frzr door
15 #	241552801	A	B	Light Bulb
16	242072101	A	B	Cover-damper
16*	241953904	A	B	Screw, #8-18
16*	242072501	A	B	Cover-EPS, damper
16A#	240590402	A	B	Socket-light, top & mid
16A*	241969202	A	B	Harness-wiring, top light
16B*	241510802	A	B	Harness-wiring, frz light
17	242071901	A	B	Gasket-air duct/liner
19	242072601	A	B	Support-EPS damper
20	242072201	A	B	Cover-air duct, rear
21	241732101	A	B	Screw, 10-32 x 1/2
21A	241953901	A	B	Screw, #8-18
21C	218252201	A	B	Screw, #8 truss hd, 10-32CA x 0.500
25	241949502	A	B	Clip, air vent
28	240335502	A	B	Bolt-roller adj, hex washer head, 1/4-20 x 4.020, (2), special
30	241778701	A	B	Bracket-anti tip
34	241868301	A	B	Washer, hinge, nylon, (2)
35	241763005	A	B	Hinge-lower, RH
35A	241763006	A	B	Hinge-lower, LH
36	241868201	A	B	Spacer, door, lower RH
36A	241868202	A	B	Spacer, door, lower LH
37	240337610	A	-	Trim-cabinet corner, black, (2)
37	240337608	-	B	Trim-cabinet corner, white, (2)
38	241761301	A	B	Bracket-upper hinge, RH
38A	241761302	A	B	Bracket-upper hinge, LH
40	241778003	A	-	Cover-upper hinge, black, RH
40	241778005	-	B	Cover-upper hinge, white, RH
40A	241778004	A	-	Cover-upper hinge, black, LH
40A	241778006	-	B	Cover-upper hinge, white, LH
40B	241862402	A	-	Cover-upper hinge, black, center
40B	241862403	-	B	Cover-upper hinge, white, center
42	240578902	A	B	Screw, hex head, 1/4-20 x 5/8
43	240335006	A	B	Roller Assy, front, (2)
45	241500303	A	B	Screw, hex washer head, 8-18AB x 1/2
50 #	242115205	A	B	Board-main power
50*	241810104	A	B	Seal, housing
50*#	242119001	A	B	Harness-wiring
54	241532401	A	B	Channel

CABINET

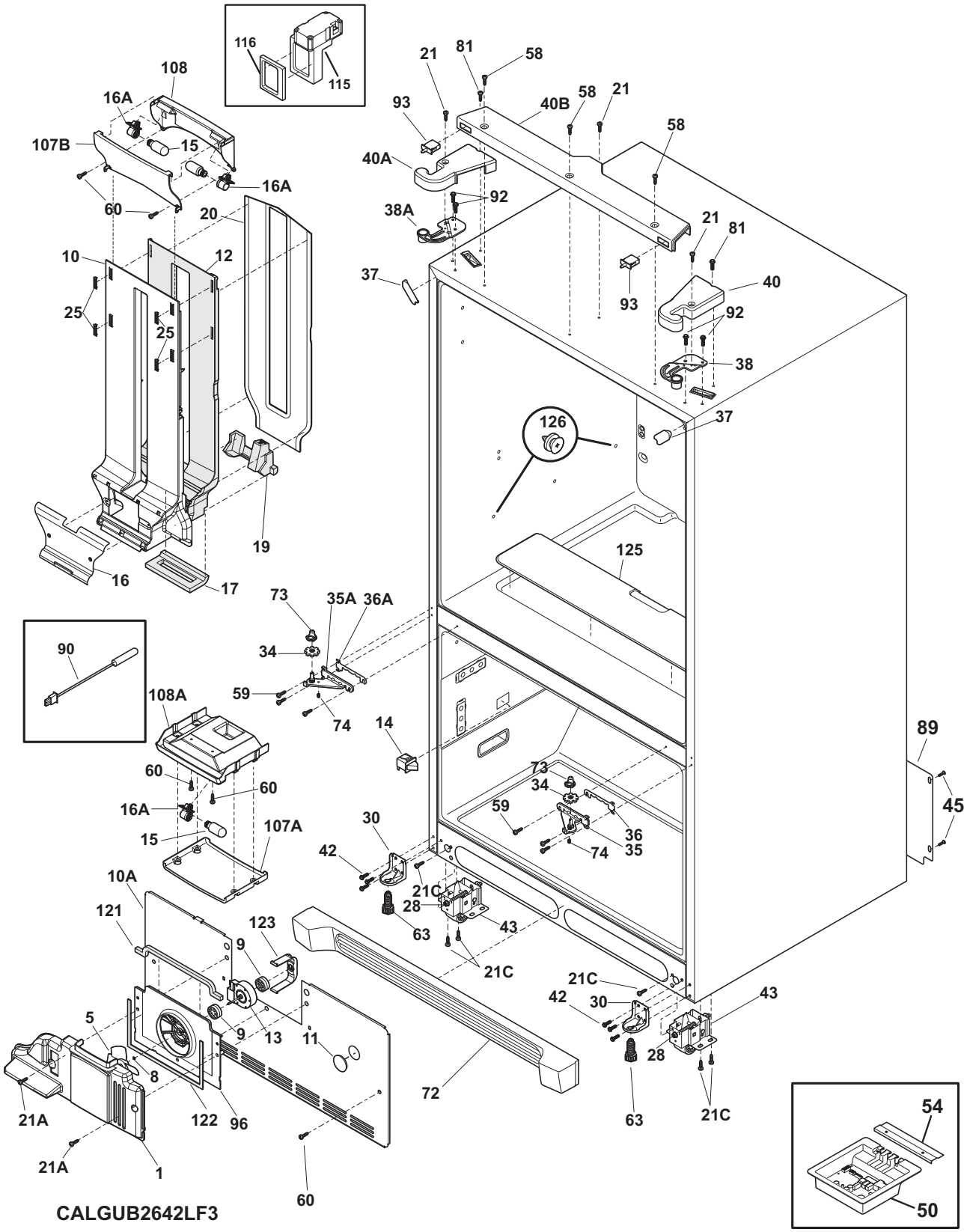

CALGUB2642LF3

CABINET

Model Index: A LGUB2642L (LGUB2642LE3)
B LGUB2642L (LGUB2642LP3)

POS. NO	PART NO.			DESCRIPTION
58	241853202	A	B	Screw
59	240442706	A	B	Screw-#10-32 X 3/4, zinc
60	218362501	A	B	Screw, hex washer head, 8-18AB x 1.250, spacer, (2)
63	216396900	A	B	Screw, leveling foot, plastic, adjustable
72	242054802	A	-	Grille/Kickplate, black
72	242054803	-	B	Grille/Kickplate, white
73	242075701	A	B	Cam-lower hinge
74	242026701	A	B	Screw, #6-32 x 9/16
81	242025601	A	B	Screw, hex head, #10-32 x 3/8
89	241733905	A	B	Cover-access, w/label
90 #	240597203	A	B	Sensor
92	241710601	A	B	Screw, hex washer hd, 1/4 x 7/8, hinge mtg
93 #	241835502	A	-	Switch-light
93 #	241835501	-	B	Switch-light, white
96	241860601	A	B	Shroud-evap fan mtg
107A	241971601	A	B	Shield-light, frzr
107B	241971202	A	B	Shield-light, upper
108	241971401	A	B	Cover-wiring, top air duct
108A	241971801	A	B	Cover-wiring, freezer light
115	241518501	A	B	Damper, motorized
116	241518601	A	B	Seal-damper, foam
121	241860112	A	B	Gasket-evap, upper
122	241860111	A	B	Gasket-evap, bottom
123	241517701	A	B	Clip, evap fan motor
125	242071201	A	B	Cover, sump
126	242081301	A	B	Screw-shoulder
*	240479601	A	B	Plug, button, cab liner holes
*	241969001	A	B	Cap, screw
* #	242015904	A	B	Harness-wiring
*	242025201	A	B	Pipe, foam
*	5303918416	A	B	Thermistor kit, T-3 suction lin, icemaker

Functional Parts
* Non-Illustrated Parts

SHELVES

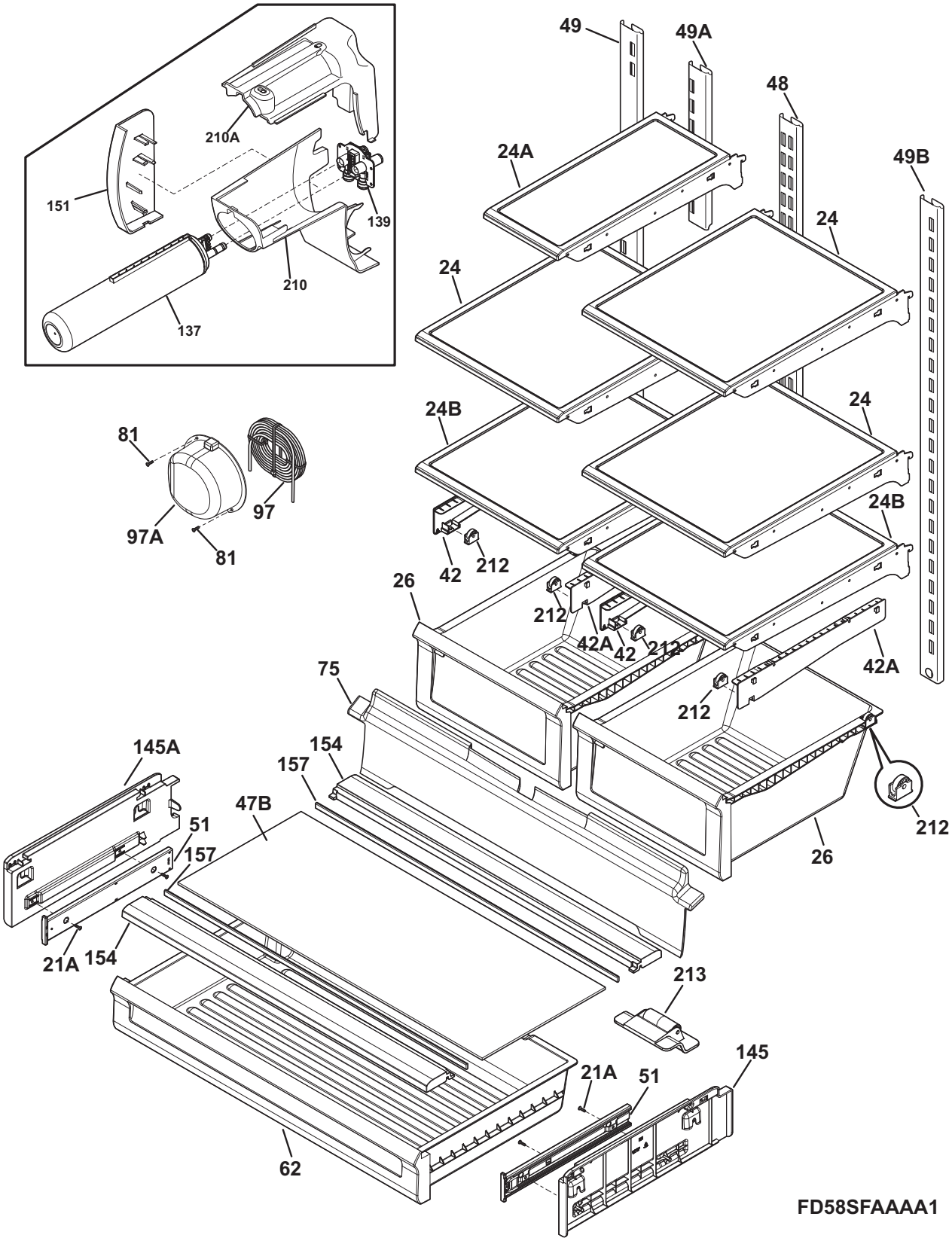
49
49A
48
49B
24A
24
24
24B
24
24B
210A
151
139
210
137
81
97
97A
81
42
212
26
212
42A
42
212
42A
75
212
145A
154
157
47B
51
157
212
26
21A
154
213
145
21A
51
62
FD58SFAAAA1

SHELVES

Model Index: A LGUB2642L (LGUB2642LE3)
B LGUB2642L (LGUB2642LP3)

POS. NO	PART NO.			DESCRIPTION
21A	241953902	A	B	Screw, #8 - 18 X .380, 3
24	242068701	A	B	Shelf-"Spill-Safe", cantilever, sliding
24A	242068702	A	B	Shelf-"Spill-Safe", cantilever, 1/4 width, sliding
24B	242068703	A	B	Shelf-"Spill-Safe", fixed
26	241801801	A	B	Pan-crisper, (2)
42	242067901	A	B	Support, crspr pan rolle
42*	241953901	A	B	Screw, #8-18
42A	242067801	A	B	Support, crspr pan rolle
47B	242082301	A	B	Glass, deli cover
48	242122101	A	B	Channel-shelf mtg, center
49	242122201	A	B	Channel-shelf mtg, side, LH
49A	242122001	A	B	Channel-shelf mtg, center, icemaker shelf
49B	242122301	A	B	Channel-shelf mtg, side, RH
51	242065301	A	B	Slide-deli
62	242096801	A	B	Pan-deli
75	242072702	A	B	Shield-light, refr
81	5304455650	A	B	Screw, hex washer head, 8-15A x 0.625, Low Profile
97	242082001	A	B	Water Tank
97A	242117301	A	B	Cover-water tank
137	241791601	A	B	Filter-water, carbon
139	242009601	A	B	Base-water filter
145	242082201	A	B	Support, rail
145A	242082202	A	B	Support, rail
151	242069701	A	B	Cover-water filter
154	242082401	A	B	Support
154*	242015001	A	B	Screw, #10 8-19 x 1/2
157	241872201	A	B	Beam-crisper cover
210	241983805	A	B	Housing-water filtr
210A	241998302	A	B	Mount-water filter
212	5304479194	A	B	Roller Assembly, crisper pan
213	242010901	A	B	Roller Assy, deli pan
*	242110214	A	B	Energy Guide

COOLING SYSTEM

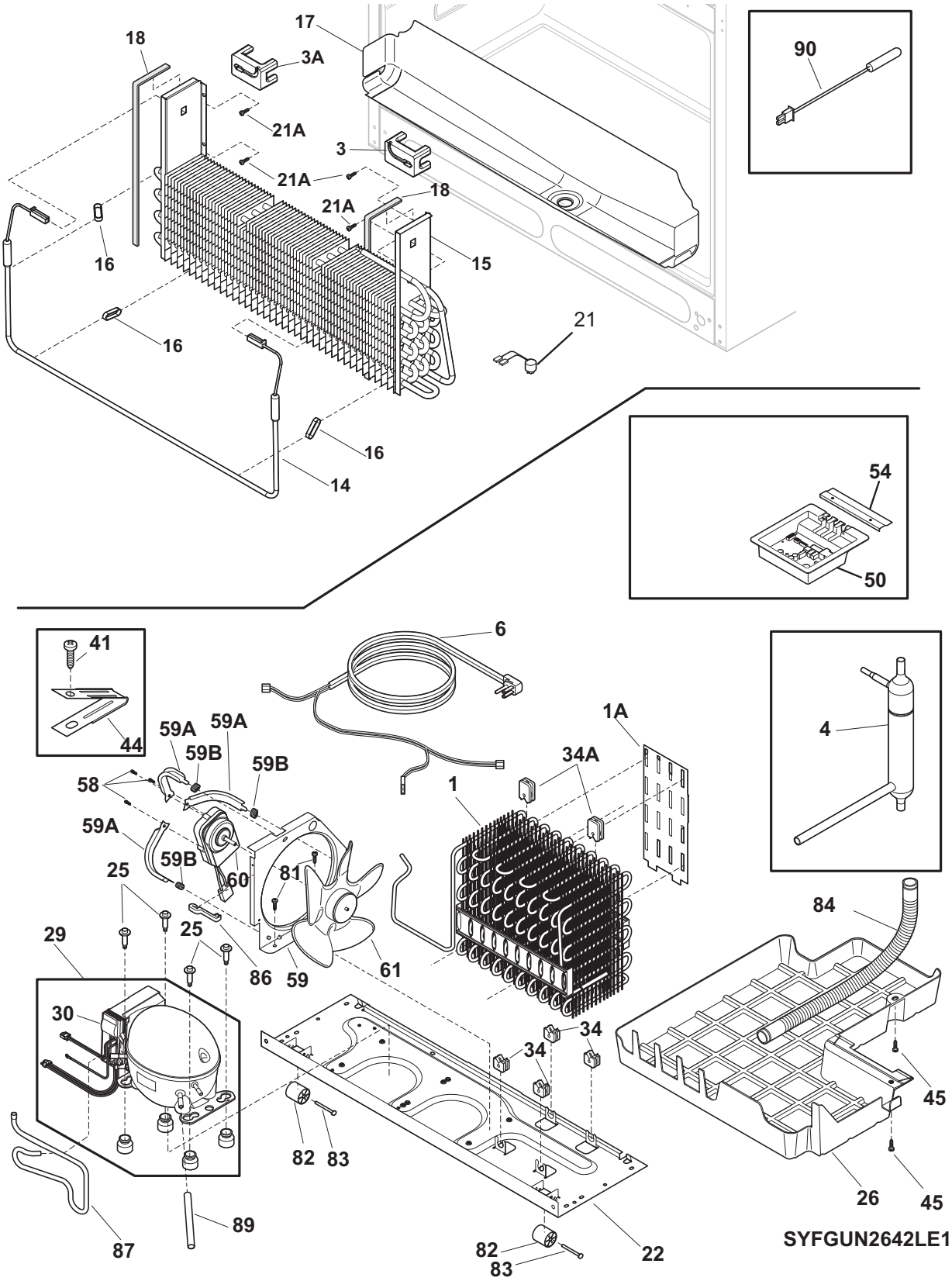

COOLING SYSTEM

Model Index: A LGUB2642L (LGUB2642LE3)
B LGUB2642L (LGUB2642LP3)

POS. NO	PART NO.			DESCRIPTION
1 #	241862901	A	B	Condenser
1*	242009501	A	B	Clip, retainer
1A	241987301	A	B	Deflector-air, condenser
3	241838401	A	B	Block-evap coil, styrofoam insul, RH
3A	241838402	A	B	Block-evap coil, styrofoam insul, LH
4 #	242047601	A	B	Drier-filter
6 #	241516901	A	B	Cord-service
6* #	242119101	A	B	Harness-wiring, machine compt
14 #	5303918410	A	B	Defrost Heater Kit, 28'
15 #	5303918551	A	B	Evaporator Kit, FDBM
16	5308000110	A	B	Strap-evap/heater, aluminum, (2)
17	242084201	A	B	Trough-drain
18	241860101	A	B	Gasket, closed cell
21 #	242046001	A	B	Thermostat-defrost
21A	218362501	A	B	Screw, hex washer head, 8-18AB x 1.250, spacer, (2)
22	241602112	A	B	Base-compressor, w/rollers
22*	218252201	A	B	Screw, #8 truss hd, 10-32CA x 0.500
25	240491503	A	B	Screw-compressor mtg, 1/4-28 x 1.16, (4)
26	241920603	A	B	Pan-defrost
29 #	5303918437	A	B	Compressor Kit
30 #	241577505	A	B	Invertor
34	241929901	A	B	Grommet-cond mtg, (4)
34A	241929902	A	B	Grommet-cond mtg, (4)
41	240555002	A	B	Screw-#8-32 X 3/8
44	215174700	A	B	Clamp-service cord, strain relief, galv steel
45	5304455650	A	B	Screw, hex washer head, 8-15A x 0.625, Low Profile
50 #	242115205	A	B	Board-main power
50*#	242102001	A	B	Harness-wiring
54	241532401	A	B	Channel
58	240433203	A	B	Screw, hex washer head, 8-18 x 3/8
59	240315502	A	B	Shroud-cond fan
59*	240346701	A	B	Tape-foam seal, shroud
59A	240346501	A	B	Bracket-support, cond mtr, (3)
59B	240346601	A	B	Grommet-bracket, (3)
60 #	241584301	A	B	Motor-condenser fan
61	241639501	A	B	Blade-condenser fan
81	240359403	A	B	Screw-fan shroud, (2)
82	5304418225	A	B	Roller, compressor base, rear, (2)
83	5304455655	A	B	Rivet, flat head, 1/4 OD x 1-3/4, roller pin
84	241830902	A	B	Tube-drain, lower
84*	242036801	A	B	Clip-tube, drain
86	240409302	A	B	Spacer-cond tube, black
87	241846302	A	B	Tube-suction, jumper
89	215346900	A	B	Tube-process
90	240597203	A	B	Sensor
90*	241842301	A	B	Cap-thermistor
*	3205266	A	B	Edge Protector, wiring harness
*	218515401	A	B	Clip-grille
* #	241510904	A	B	Harness-dispenser, grounding
*	241947701	A	B	Spacer, heat exchanger
* #	5303918416	A	B	Thermistor kit, T-3 suction lin, icemaker
* #	5303918445	A	B	Heat Exchanger Kit, suction line, service
* #	5303918446	A	B	Heat Exchanger, icemaker
*	5303918428	A	B	Hot Tube Repair Kit, service

CONTROLS & ICE DISPENSER

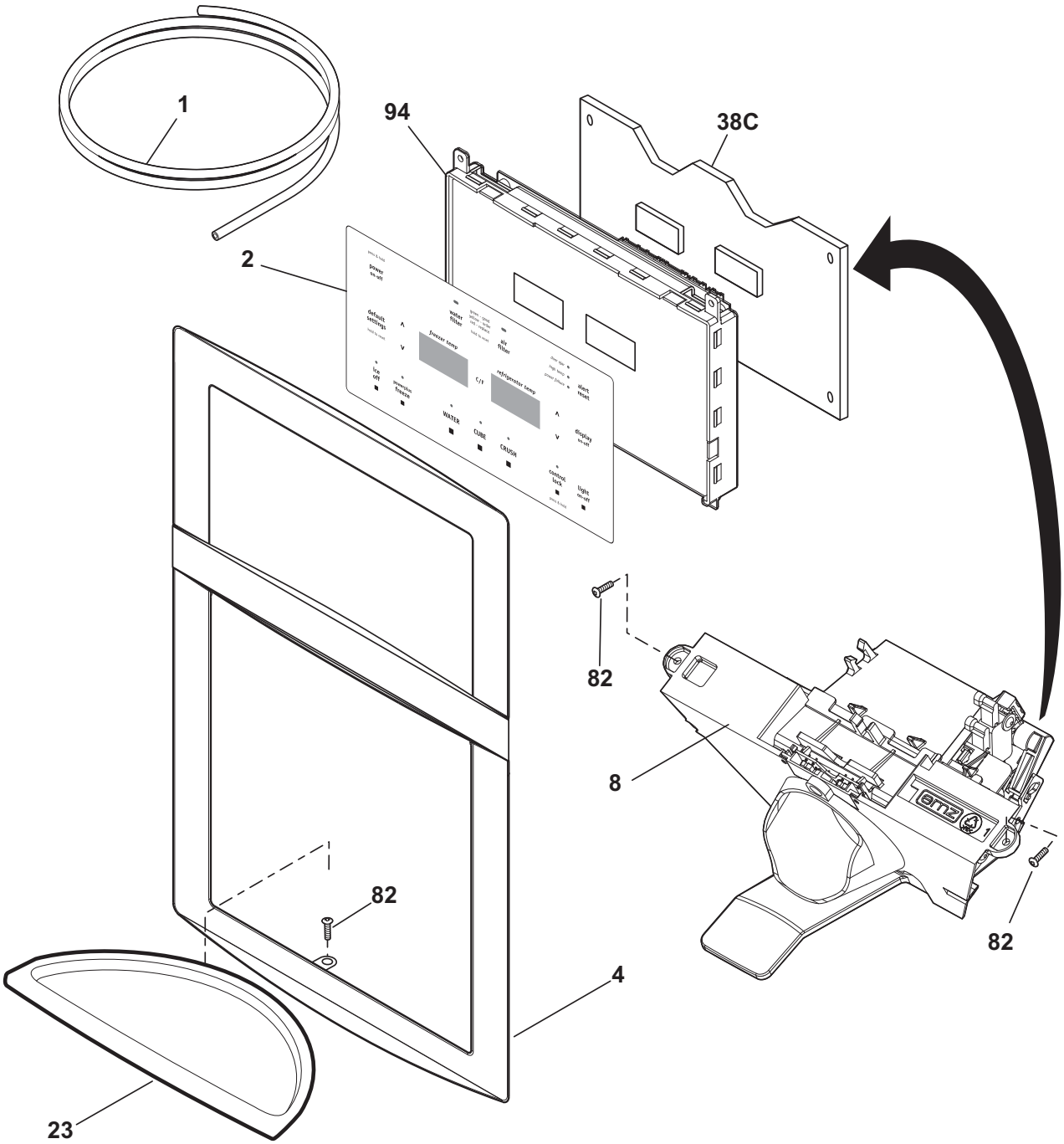

FD58XFCBAA0

CONTROLS & ICE DISPENSER

Model Index: A LGUB2642L (LGUB2642LE3)
B LGUB2642L (LGUB2642LP3)

POS. NO	PART NO.			DESCRIPTION
1	218976424	A	B	Tube-water, 64.00", yellow
1*	241920102	A	B	Tube-water inlet, green
1*	241964703	A	B	Tube-water
1*	241964704	A	B	Tube-water
1*	241965901	A	B	Tube-water, formed, 64.86"
2 #	242035601	A	-	Switch-membrane
2 #	242035602	-	B	Switch-membrane
4	242089602	A	-	Cover-module, black
4	242089601	-	B	Cover-module, white
8	242074201	A	-	Module-dispenser, black
8	242074202	-	B	Module-dispenser, white
23	242034002	A	-	Drip Tray, black
23	242034001	-	B	Drip Tray, white
38C#	241973706	A	B	Board-control
82	241953902	A	B	Screw, #8 - 18 X .380, 3
94	242034101	A	B	Housing-control
* #	241510904	A	B	Harness-dispenser, grounding
*	242105401	A	B	Chute-ice
*	5303918371	A	B	Dispenser heater kit, 115

ICE CONTAINER

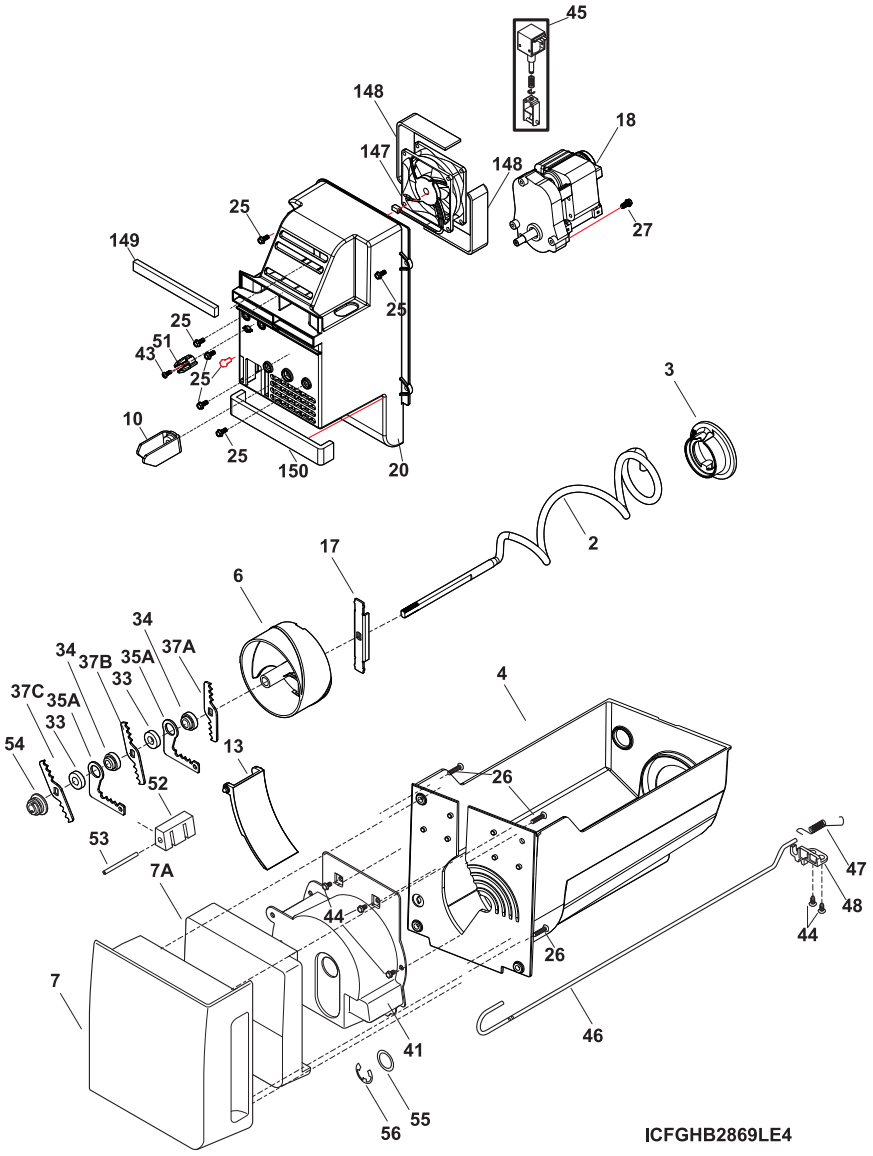

ICE CONTAINER

Model Index: A LGUB2642L (LGUB2642LE3)
B LGUB2642L (LGUB2642LP3)

POS. NO	PART NO.			DESCRIPTION
2	241829401	A	B	Auger-ice
3	241830201	A	B	Cam-drive
4	242093101	A	B	Container-ice, bucket only
6	241829801	A	B	Drum-ice disp
7	242093201	A	B	Cover, bucket front
7A	242095201	A	B	Insulation, i/container frt
10	241829001	A	B	Bar-drive
13	242106201	A	B	Gate
17	241830601	A	B	Drive Blade
18 #	241816601	A	B	Motor-auger
18*#	242095802	A	B	Harness-wiring, air handler
20	242095701	A	B	Housing-air handler, Gen II IM
25	240555004	A	B	Screw, 8-32 x 3/8, black
26	242015001	A	B	Screw, #10 8-19 x 1/2
27	240555002	A	B	Screw-#8-32 X 3/8
33	241684801	A	B	Spacer
34	241689801	A	B	Spacer
35A	241830401	A	B	Fixed Blade, round
37A	241830301	A	B	Blade, crusher #1
37B	241830302	A	B	Blade, crusher #2
37C	241830303	A	B	Blade, crusher #3
41	242093301	A	B	Housing-crusher
43	241641502	A	B	Screw
44	241953901	A	B	Screw, #8-18
45 #	241675701	A	B	Solenoid Assy, 115V
46	241817901	A	B	Control Rod
47	241839002	A	B	Spring-control rod
48	241830101	A	B	Bracket-control
51	242095501	A	B	Pin-anti twist bkt Gen II IM
52	241830701	A	B	Spacer-fixed blades
53	241869601	A	B	Pin-spiral, fixed blades
54	241829601	A	B	Nut-auger
55	241690306	A	B	Washer
56	241690201	A	B	E-ring
147#	242119401	A	B	Fan Assembly, motor, with blade
148	242095406	A	B	Gasket
149	242095404	A	B	Gasket-evap housing, .250x.250x5.250
150	242095407	A	B	Gasket
*	242093001	A	B	Ice Container Assy, w/moving parts

FRESH FOOD ICE MAKER

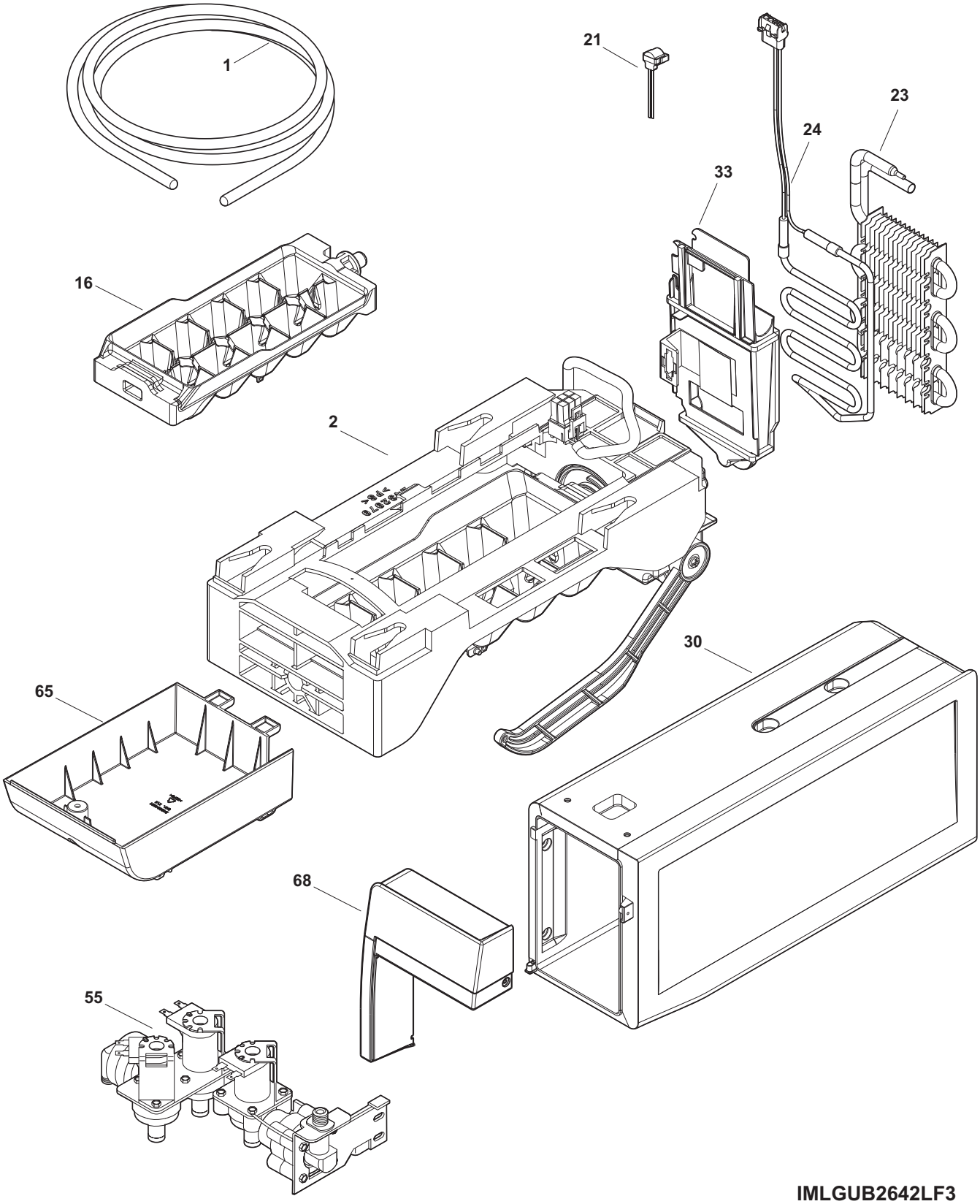

FRESH FOOD ICE MAKER

Model Index: A LGUB2642L (LGUB2642LE3)
B LGUB2642L (LGUB2642LP3)

POS. NO	PART NO.			DESCRIPTION
1	218976424	A	B	Tube-water, 64.00", yellow
1*	218976432	A	B	Tube-water, brown/tan
1*	218976812	A	B	Tube-water inlet, valve to I.M.
1*	241518001	A	B	Nut, 1/2-20, nylon, water hose, (2)
1*	241965901	A	B	Tube-water, formed, 64.86"
1*	242041804	A	B	Tube-water inlet, yellow, inlet valve, to icemaker
1*	242082104	A	B	Tube-water
2 #	243297603	A	B	Ice Maker, complete, 115 V
16	243298001	A	B	Tray-ice
21 #	5303918568	A	B	Thermostat-defrost, defrost, icemaker evap
23	5303918567	A	B	Evaporator Kit
24 #	242094801	A	B	Heater-defrost
30	242142201	A	B	Cover, icmkr & bucket
30*	241695906	A	B	Screw, 10-16AB x 0.50
30*	242124801	A	B	Gasket
30*	242124802	A	B	Gasket
30*	242146001	A	B	Gasket
33	242094401	A	B	Housing-evaporator
33*	242095408	A	B	Gasket-evap housing
33*	242095402	A	B	Gasket-evap housing, .250x.250x3.300
33*	242095403	A	B	Gasket-evap housing, .250x.250x7.750
33*	242095404	A	B	Gasket-evap housing, .250x.250x5.250
33*	242095405	A	B	Gasket-evap housing, .250x.250x6.600
33*	215688131	A	B	Tape, aluminum, 2" wd x 3.50" l
55 #	242102201	A	B	Valve-water, 4 position, 115 V
55*	218709101	A	B	Screw, hex head, 10-32 x 0.500
55*	240363602	A	B	Screw-shoulder
65	242094301	A	B	Cover-wiring
65*	241953902	A	B	Screw, #8 - 18 X .380, 3
68	242095001	A	B	Cover-front, bucket trim
68*	242096001	A	B	Insulation, i/container frt
*	240396801	A	B	Clamp, tube/wiring, nylon, black/natural
*	241503901	A	B	Connector-water, straight
*	242039701	A	B	Screw
*	242103001	A	B	Connector-water, straight
*	242105401	A	B	Chute-ice
*	5303918571	A	B	kit-water fill chute

Functional Parts
* Non-Illustrated Parts

FREEZER ICE MAKER

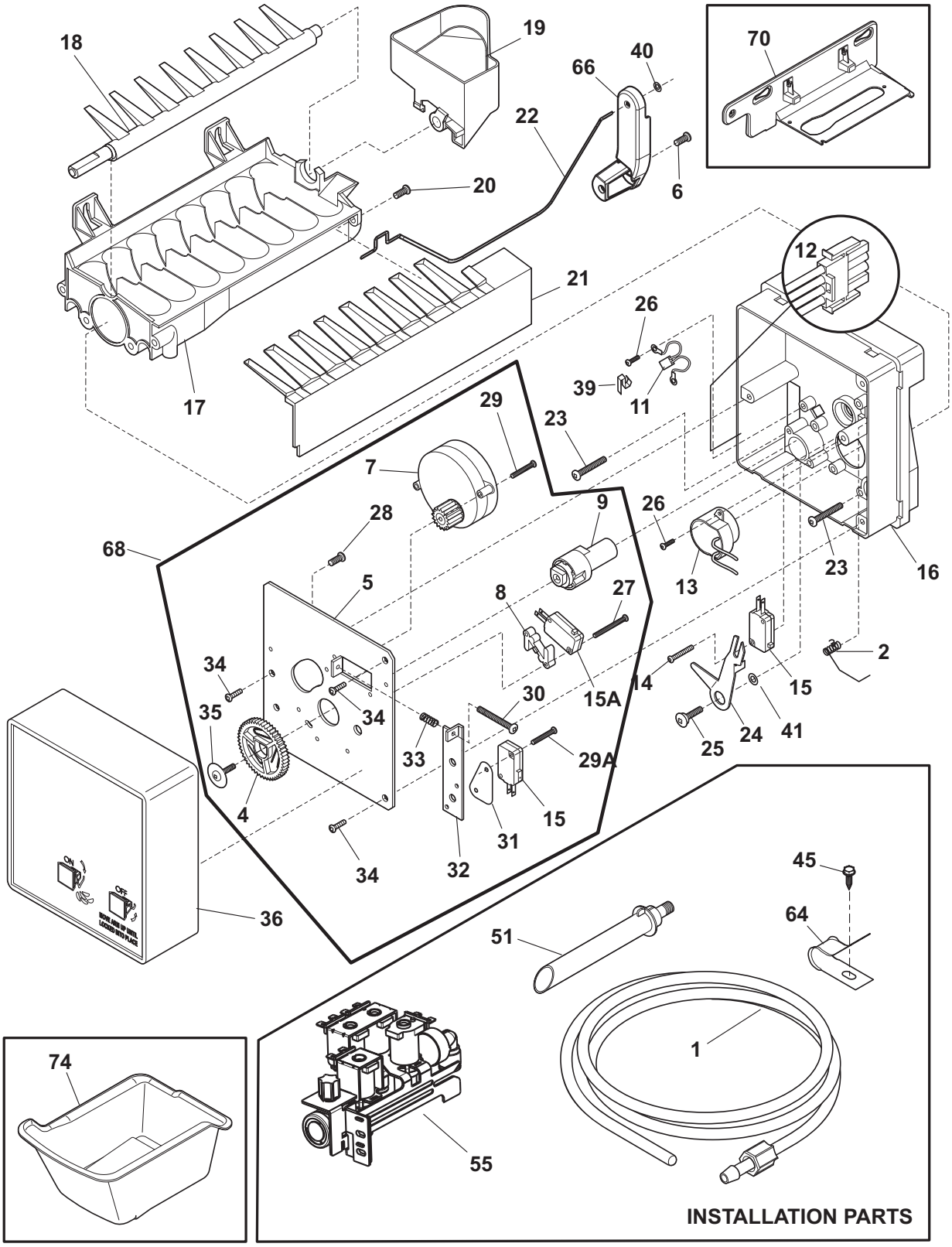

FD58I115BMdual

FREEZER ICE MAKER

Model Index: A LGUB2642L (LGUB2642LE3)
B LGUB2642L (LGUB2642LP3)

POS. NO	PART NO.			DESCRIPTION
1	241965901	A	B	Tube-water, formed, 64.86"
1*	218976432	A	B	Tube-water, brown/tan
1*	218976812	A	B	Tube-water inlet, valve to I.M.
1*	241518001	A	B	Nut, 1/2-20, nylon, water hose, (2)
1*	242082103	A	B	Tube-water
1*	242082104	A	B	Tube-water
2	5304469396	A	B	Spring-shutoff arm, ice maker
4	5304469403	A	B	Gear
5	5304469399	A	B	Mounting Plate
6	3206305	A	B	Screw-ground wire, 8-32 x 0.250
7 #	5304469407	A	B	Motor-ice maker
8	5304469404	A	B	Spacer-hold switch
9	5304469402	A	B	Cam
11	5304455695	A	B	Thermal Cutoff, ice maker, complete assy
12 #	5304469390	A	B	Harness-wiring
13	5304469387	A	B	Thermostat Assy, ice maker
14	5304469394	A	B	Screw, #5-24 x 3/4
15 #	5304469388	A	B	Switch-micro, 2
15A#	5304469405	A	B	Switch-micro
16	5304469379	A	B	Housing, control
17 #	5304469413	A	B	Mold-ice maker, with heater
18	5304469384	A	B	Ejector-ice
19	242051201	A	B	Cup-water inlet, w/bearing
20	5304469391	A	B	Screw, 8-32 x 3/8
21	5304469378	A	B	Ice Stripper
22	242051301	A	B	Shut-off Arm
23	5304469392	A	B	Screw, mold-to-support, (2)
24	5304469382	A	B	Lever Arm
25	5304469397	A	B	Screw, lever arm/sprt
26	5304469393	A	B	Screw
27	5304469410	A	B	Screw, hold switch mtg, (2)
27*	5304469406	A	B	Insulator
28	5304469414	A	B	Screw, #8-32 x 1/4"
29	5304469409	A	B	Screw
29A	5304469412	A	B	Screw, #4-24 X 3/4"
30	5304469408	A	B	Screw-timing adj, 8-32 x 1.000
31	5304469389	A	B	Spacer-switch
32	5304469400	A	B	Plate-valve switch
33	5304469401	A	B	Spring, timing adjust
34	5304469380	A	B	Screw, #8-10*1/2
35	5304469411	A	B	Screw
36	5304469385	A	B	Cover-ice maker
39	5304469383	A	B	Clamp
40	5304458401	A	B	Clip-retainer
41	5304469381	A	B	Washer, flat
45	5304453923	A	B	Screw, hex hd wshr, #8-32 x 1/2
51	242098101	A	B	Tube-water, ice mold fill, extension
55 #	242102201	A	B	Valve-water, 4 position, 115 V
55*	218709101	A	B	Screw, hex head, 10-32 x 0.500

Functional Parts
* Non-Illustrated Parts

FREEZER ICE MAKER

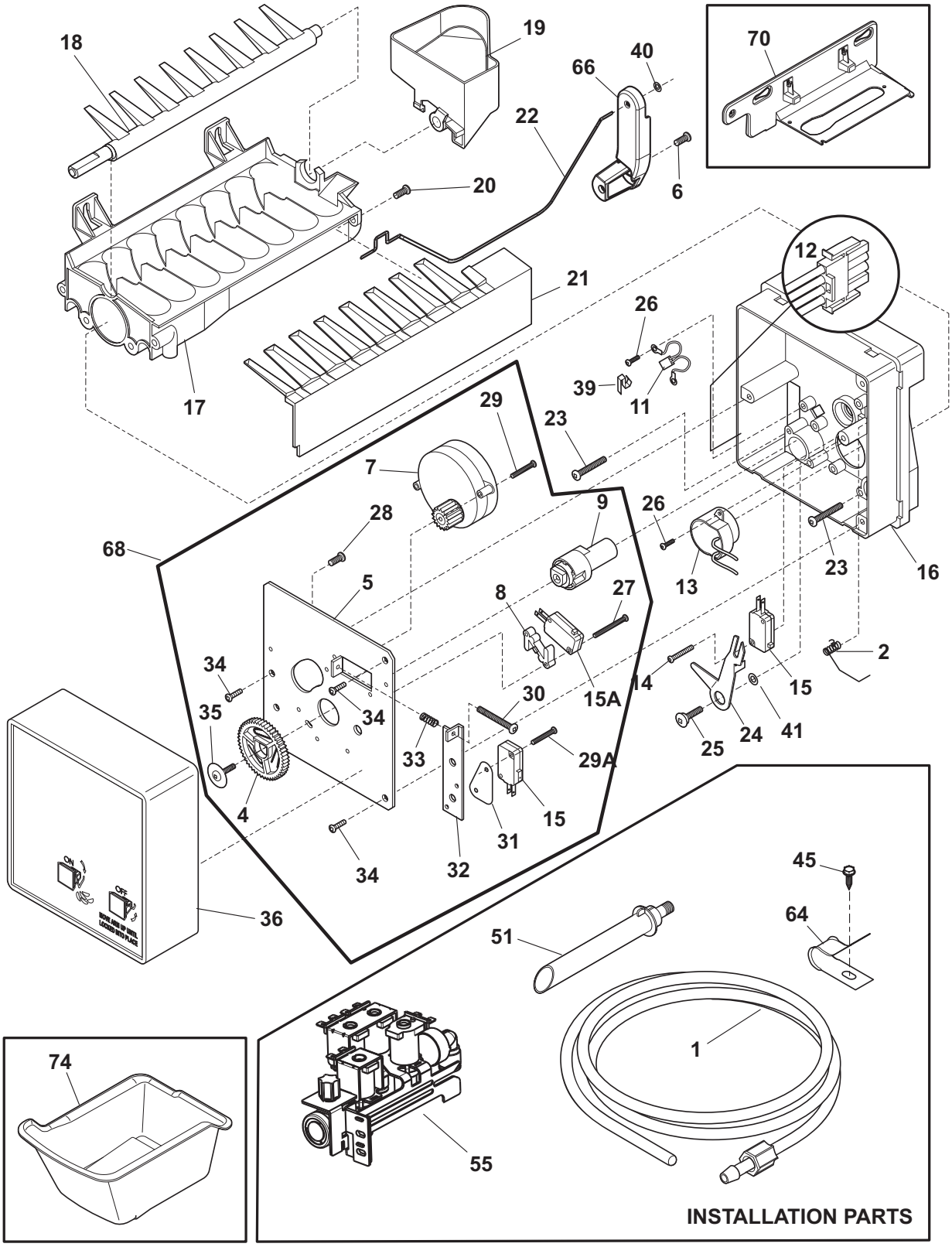

FD58I115BMdual

FREEZER ICE MAKER

Model Index: A LGUB2642L (LGUB2642LE3)
B LGUB2642L (LGUB2642LP3)

POS. NO	PART NO.			DESCRIPTION
55*	240363602	A	B	Screw-shoulder
64	5304453921	A	B	Clamp-cable
66	242060701	A	B	Bracket-ice maker, shut off arm
68	5304469398	A	B	Mounting Plate, assy
70	242041701	A	B	Bracket-ice maker
70*	240383406	A	B	Screw, truss hd quad, #10-16 x .500, zinc
70*	241690701	A	B	Screw, hex washer head, 8-32T x 0.375
70*	242039701	A	B	Screw
74	242041901	A	B	Container-ice
*	240396801	A	B	Clamp, tube/wiring, nylon, black/natural
*	242103001	A	B	Connector-water, straight
*	241798219	A	B	Ice Maker, radius cube, 115 V, service

WIRING DIAGRAM

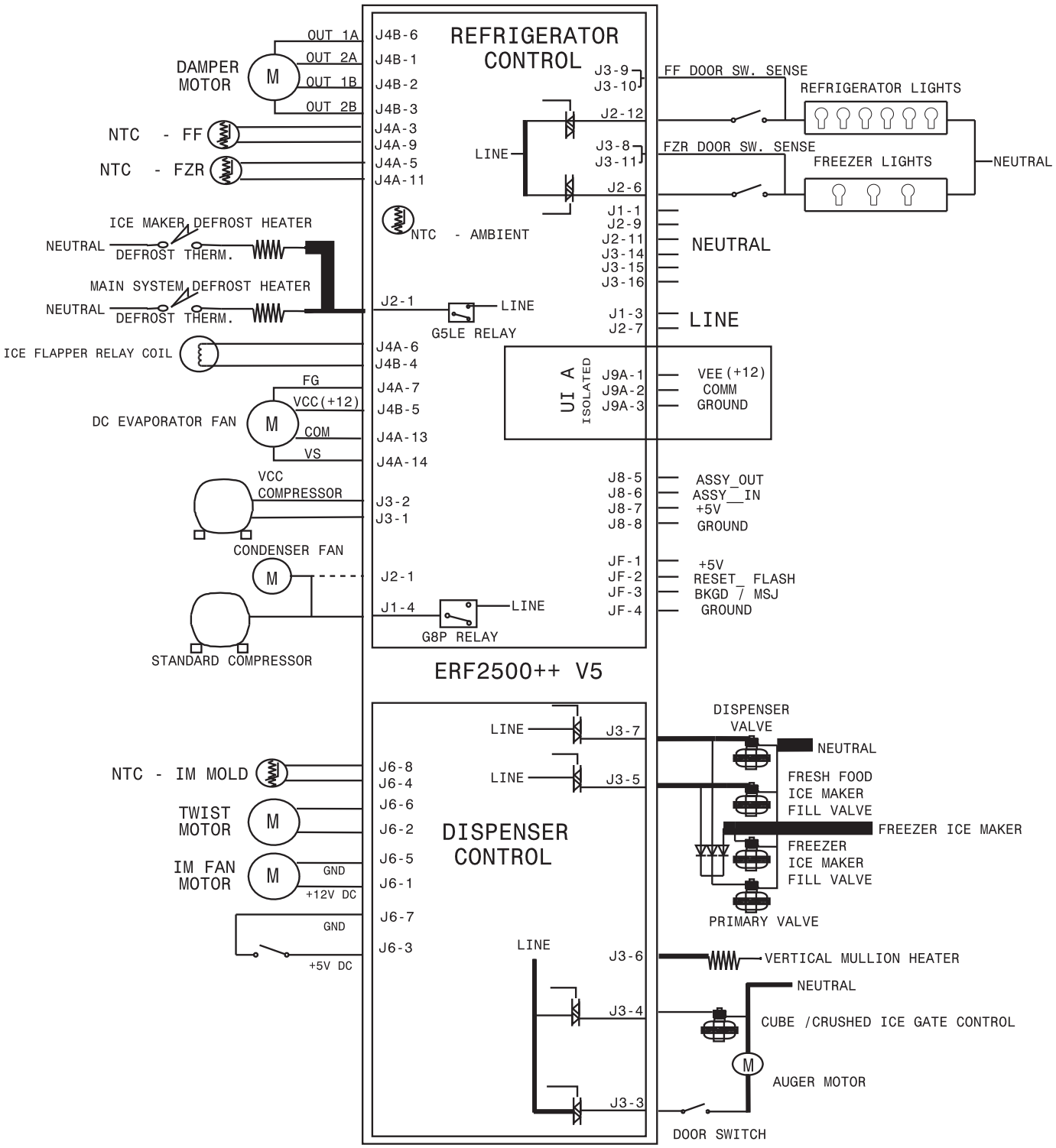

WIRING DIAGRAM

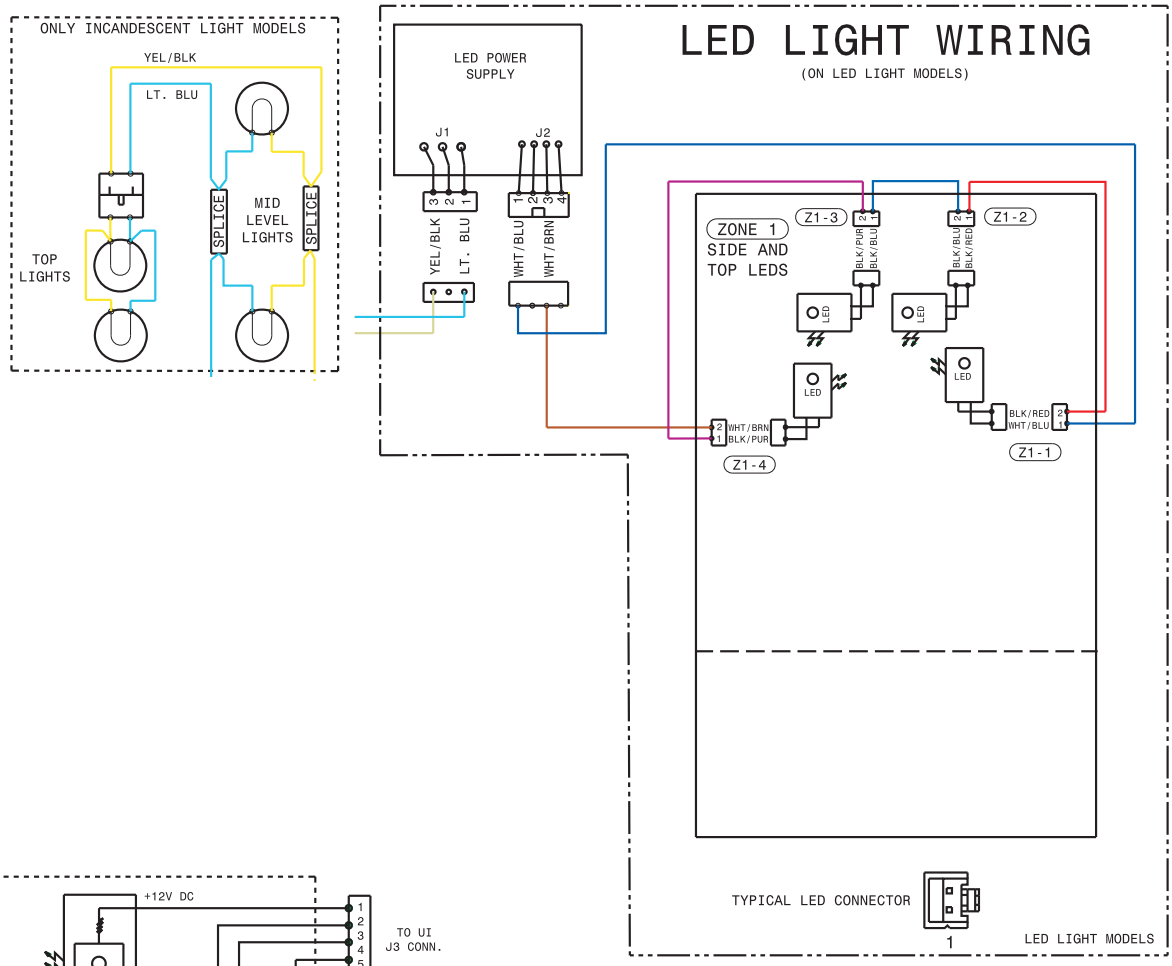

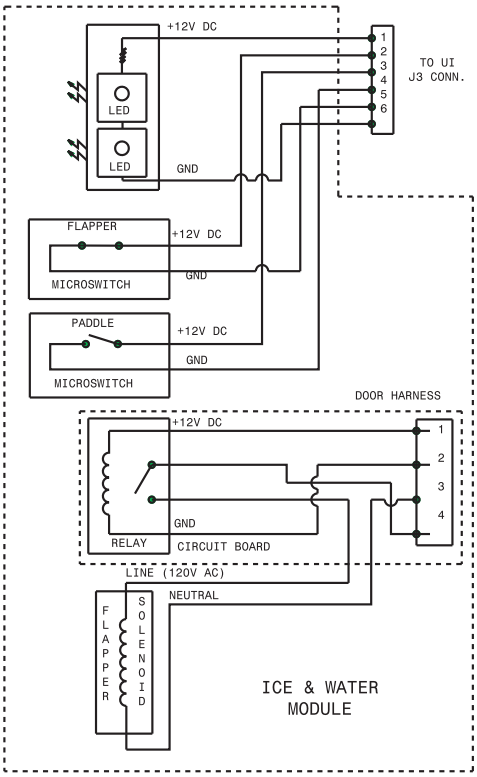

ERF2500++ ERROR CODES:

FREEZER DISPLAY:
- "OP" OR "2" - FREEZER THERMISTOR "OPEN"
- "SH" OR "3" - FREEZER THERMISTOR "SHORTED"

FRESH FOOD DISPLAY:
- "OP" OR "2" - FRESH FOOD THERMISTOR "OPEN"
- "SH" OR "3" - FRESH FOOD THERMISTOR "SHORTED"

BOTH DISPLAYS:
- "SY CE" - COMMUNICATION ERROR
- "SY CF" - COMMUNICATION LOST ERROR
- "SY EF" - EVAPORATOR FAN ERROR

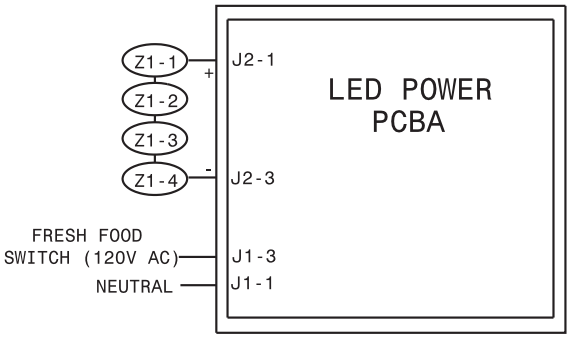
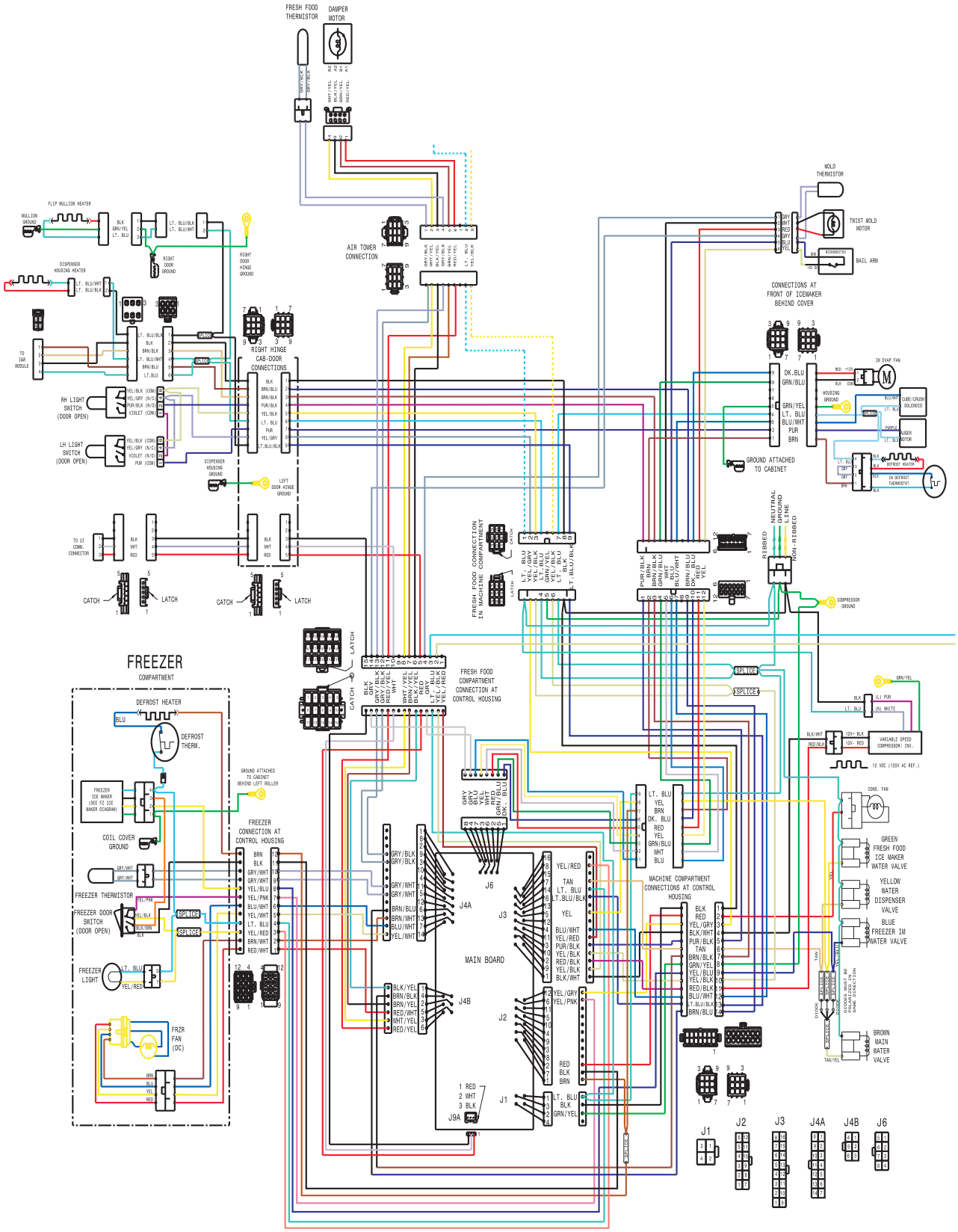
WIRING DIAGRAM